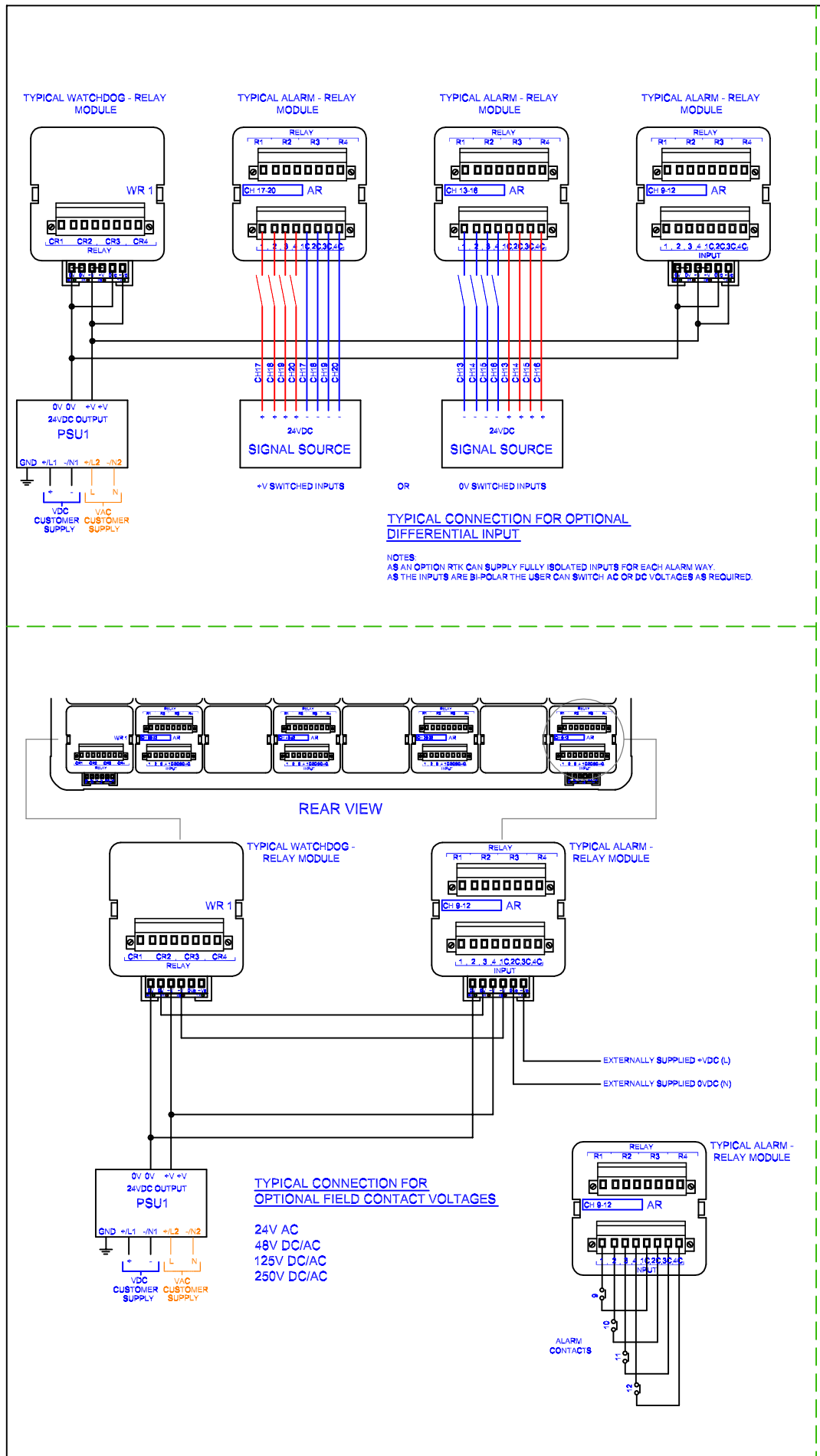

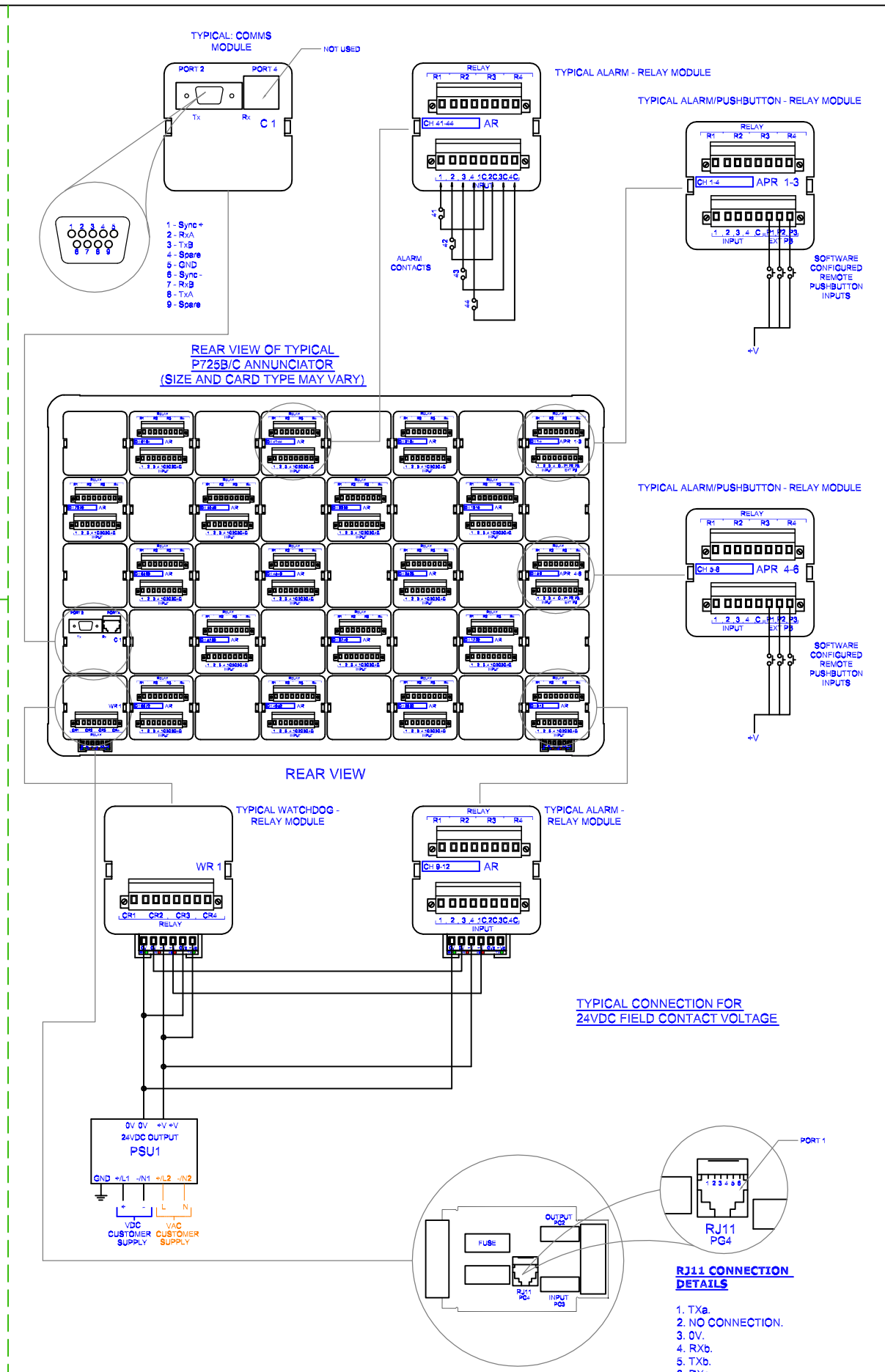

NOTES:

1. THE 725B/C ANNUNCIATOR IS SCALABLE PRODUC BASED ON A STANDARD BLACK PLASTIC CELL HOUSING.
2. ALL 725B/C ALAR CARDS ARE FOUR CHANNEL.
3. RTK OFFER THREE WINDOW SIZES, SMALL (4 CHANNELS PER CELL), MEDIUM (2 CHANNELS PER CELL) AND LARGE (1 CHANNEL PER CELL).
4. ALARM CARD PLACEMENT IS DEPENDENT UPON WINDOW SIZE. PLEASE REFER TO THE USER MANUAL SECTION 7 PAGE 61.

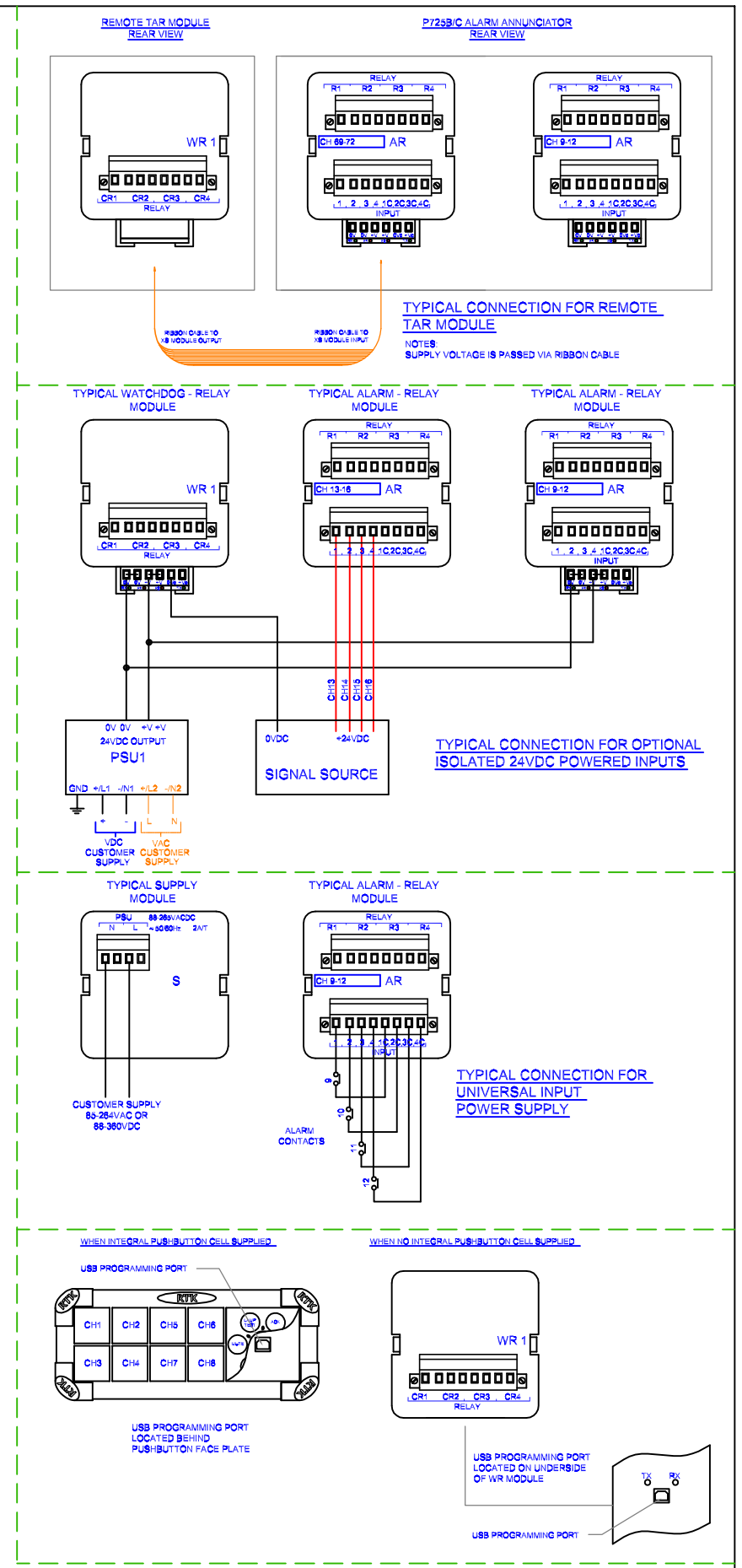

GENERAL NOTES:

1) ENSURE ALARM CONTACTS ARE WIRED TO THE CORRECTLY NUMBERED TERMINAL FOR THE WINDOW NUMBER AS SHOWN.
2) CABLE USED SHOULD BE NO GREATER THAN 2.5mm².
3) ALL TERMINALS MARKED WITH A (C) ARE INTERNALLY COMMONED TOGETHER TO +VC AND FUSED IN THE XS485 & XS MODULE F2 = 1A/F. A SINGLE COMMON CONNECTION CAN BE MADE FROM ANY ONE OF THESE TERMINALS.
4) REMOTE PUSHBUTTONS CAN BE CONNECTED USING THE TERMINALS MARKED ON THE FIRST AND THIRD MODULES AND COMMONED TO PSU (+V).
5) UNIT DEPTH IS 145mm BEHIND PANEL DOOR.

Issue	Ecr No	Drawn	Chk'd	App'd	Date
0	-	ML	GN		09 MAR 11

Scale: NTS	Material: SEE NOTES	Title: CONNECTION DRAWING FOR TYPICAL P725B/C ANNUNCIATOR	Project: P725B/C
Tolerance: ±0.2mm/±2°	Finish: SEE NOTES		Project Title: P725B/C ALARM ANNUNCIATOR
			Source / Cross Reference / Drawing Number: P725B/C